VALVE END	DIM'S	CROSS TUBE 0.75 [19,0]	1.00 [25,4]	1.50 [38,1]	2.00 [50,8]	2.50 [63,5]	3.00 [76,2]	4.00 [101,6]
0.75 [DN20] — 0.75 [19,0]	'A'	5.00 [127,0]	6.12 [155,4]	8.50 [215,9]	11.00 [279,4]	12.50 [317,5]	14.00 [355,6]	17.00 [431,8]
	'B'	3.00 [76,2]	3.00 [76,2]	3.75 [95,2]	4.75 [120,6]	5.50 [139,7]	6.25 [158,8]	8.00 [203,2]
	'C'	3.25 [82,6]	3.38 [85,9]	3.65 [92,7]	3.91 [99,3]	4.17 [105,9]	4.43 [112,5]	4.95 [125,7]
	'D'	1.50 [38,1]	1.50 [38,1]	1.50 [38,1]	1.50 [38,1]	1.50 [38,1]	1.50 [38,1]	1.50 [38,1]
	'E'	0.26 [6,6]	0.46 [11,7]	0.73 [18,5]	0.93 [23,6]	1.09 [27,7]	1.23 [31,2]	1.68 [42,7]
	'F'	2.25 [57,2]	2.38 [60,5]	2.65 [67,3]	2.91 [73,9]	3.17 [80,5]	3.43 [87,1]	3.95 [100,3]
	'H'	0.50 [12,7]	0.50 [12,7]	0.50 [12,7]	0.50 [12,7]	0.50 [12,7]	0.50 [12,7]	0.50 [12,7]
	'J'	0.47 [11,9]	0.58 [14,7]	0.53 [13,5]	0.88 [22,4]	1.18 [30,0]	1.62 [41,1]	2.40 [61,0]
	'K'	2.19 [55,6]	2.32 [58,9]	2.59 [65,8]	2.84 [72,1]	3.09 [78,5]	3.34 [84,8]	3.83 [97,3]
	'L'	1.75 [44,4]	1.74 [44,2]	1.75 [44,4]	1.76 [44,7]	1.76 [44,7]	1.78 [45,2]	1.80 [45,7]
	'M'	0.70 [17,8]	0.89 [22,6]	1.17 [29,7]	1.36 [34,5]	1.53 [38,9]	1.67 [42,4]	2.11 [53,6]
1.00 [DN25] — 1.00 [25,4]	'A'		6.12 [155,4]	8.50 [215,9]	11.00 [279,4]	12.50 [317,5]	14.00 [355,6]	17.00 [431,8]
	'B'		3.00 [76,2]	3.75 [95,2]	4.75 [120,6]	5.50 [139,7]	6.25 [158,8]	8.00 [203,2]
	'C'		3.63 [92,2]	3.90 [99,1]	4.16 [105,7]	4.42 [112,3]	4.68 [118,9]	5.19 [131,8]
	'D'		1.50 [38,1]	1.50 [38,1]	1.50 [38,1]	1.50 [38,1]	1.50 [38,1]	1.50 [38,1]
	'E'		0.28 [7,1]	0.59 [15,0]	0.81 [20,6]	0.98 [24,9]	1.15 [29,2]	1.44 [36,6]
	'F'		3.25 [82,6]	3.52 [89,4]	3.78 [96,0]	4.04 [102,6]	4.30 [109,2]	4.81 [122,2]
	'H'		1.12 [28,4]	1.12 [28,4]	1.12 [28,4]	1.12 [28,4]	1.12 [28,4]	1.12 [28,4]
	'J'		0.63 [16,0]	0.88 [22,4]	0.65 [16,5]	0.92 [23,4]	1.24 [31,5]	1.73 [43,9]
	'K'		2.52 [64,0]	2.78 [70,6]	3.05 [77,5]	3.31 [84,1]	3.56 [90,4]	4.05 [102,9]
	'L'		1.99 [50,5]	2.00 [50,8]	1.99 [50,5]	1.99 [50,5]	2.00 [50,8]	2.02 [51,3]
	'M'		0.96 [24,4]	1.26 [32,0]	1.48 [37,6]	1.65 [41,9]	1.82 [46,2]	2.11 [53,6]
1.50 [DN40] — 1.50 [38,1]	'A'			8.50 [215,9]	11.00 [279,4]	12.50 [317,5]	14.00 [355,6]	17.00 [431,8]
	'B'			3.75 [95,2]	4.75 [120,6]	5.50 [139,7]	6.25 [158,8]	8.00 [203,2]
	'C'			4.46 [113,3]	4.73 [120,1]	4.99 [126,7]	5.25 [133,4]	5.76 [146,3]
	'D'			1.50 [38,1]	1.50 [38,1]	1.50 [38,1]	1.50 [38,1]	1.50 [38,1]
	'E'			0.23 [5,8]	0.55 [14,0]	0.79 [20,1]	0.99 [25,1]	1.32 [33,5]
	'F'			4.08 [103,6]	4.35 [110,5]	4.61 [117,1]	4.87 [123,7]	5.38 [136,7]
	'H'			1.12 [28,4]	1.12 [28,4]	1.12 [28,4]	1.12 [28,4]	1.12 [28,4]
	'J'			0.75 [19,0]	0.88 [22,4]	0.88 [22,4]	0.99 [25,1]	1.28 [32,5]
	'K'			3.35 [85,1]	3.63 [92,2]	3.90 [99,1]	4.16 [105,7]	4.66 [118,4]
	'L'			2.54 [64,5]	2.54 [64,5]	2.53 [64,3]	2.53 [64,3]	2.54 [64,5]
	'M'			1.26 [32,0]	1.58 [40,1]	1.82 [46,2]	2.02 [51,3]	2.35 [59,7]
2.00 [DN50] — 2.00 [50,8]	'A'				11.00 [279,4]	12.50 [317,5]	14.00 [355,6]	17.00 [431,8]
	'B'				4.75 [120,6]	5.50 [139,7]	6.25 [158,8]	8.00 [203,2]
	'C'				5.29 [134,4]	5.56 [141,2]	5.82 [147,8]	6.33 [160,8]
	'D'				1.75 [44,4]	1.75 [44,4]	1.75 [44,4]	1.75 [44,4]
	'E'				0.29 [7,4]	0.60 [15,2]	0.84 [21,3]	1.22 [31,0]
	'F'				4.66 [118,4]	4.93 [125,2]	5.19 [131,8]	5.70 [144,8]
	'H'				1.12 [28,4]	1.12 [28,4]	1.12 [28,4]	1.12 [28,4]
	'J'				0.97 [24,6]	1.00 [25,4]	1.03 [26,2]	1.01 [25,7]
	'K'				3.93 [99,8]	4.20 [106,7]	4.47 [113,5]	4.99 [126,7]
	'L'				3.05 [77,5]	3.04 [77,2]	3.03 [77,0]	3.02 [76,7]
	'M'				1.60 [40,6]	1.92 [48,8]	2.15 [54,6]	2.54 [64,5]

LIST OF MAJOR COMPONENTS

ITEM	DESCRIPTION	MATERIAL	QTY
1	BODY-ZSBBS	SS 316L	1
2	TUBING-ELBOW 90° CROSS TUBE END	SS 316L	AR
3	TUBING-VALVE END 16G	SS 316L	1
4	FERRULE-CROSS TUBE END TC	SS 316L	AR
5	FERRULE-VALVE END TC	SS 316L	1
6	STUD		4
7	FERRULE-SAMPLE PORT END TC 00.50 x 01.12	SS 316L	1
	FERRULE-REDUCING SAMPLE PORT END TC 00.50 x 01.12	SS 316L	1

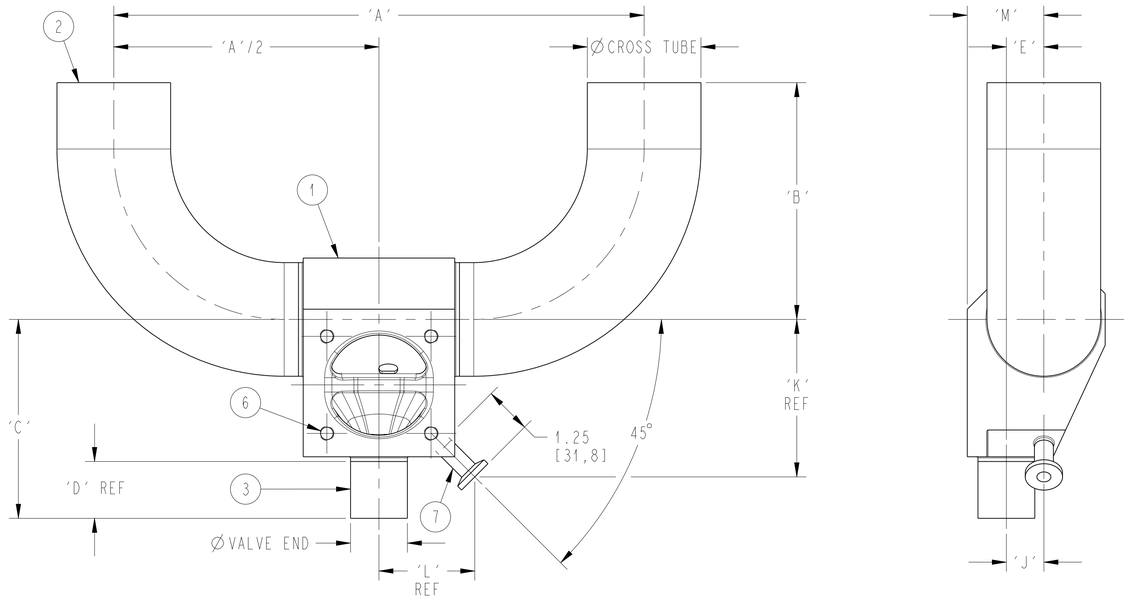

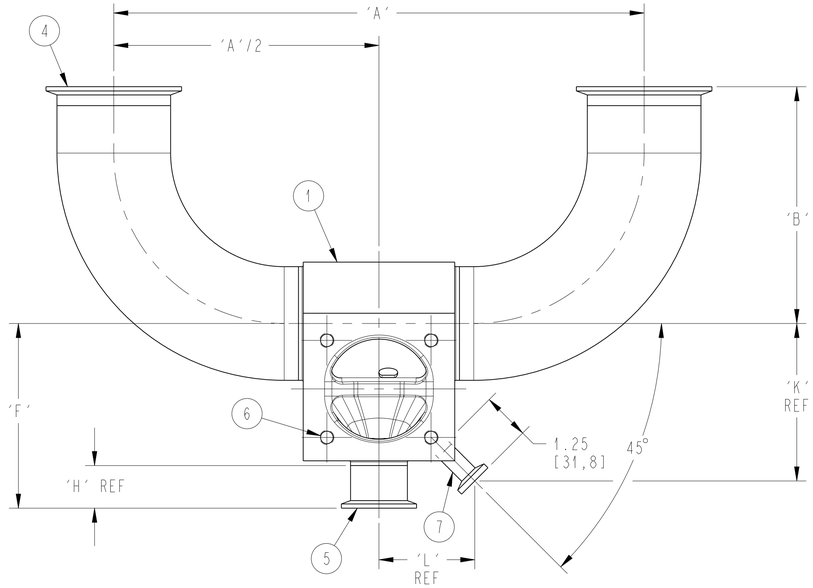

RIGHT HAND ORIENTATION SHOWN

SEE NOTE 1

NOTES:
1. LEFT HAND AND RIGHT HAND ORIENTATION IS DETERMINED BY VIEWING THE MACHINE FACE OF THE MAIN VALVE.

P1 P2 P3 P4 — P & ID

PURE-FLO ORDER: - ITEM: -
CUSTOMER: -
CUSTOMER PO: -
OTHER INFO: -
ISSUED BY: CERTIFIED BY:

THIS DOCUMENT IS THE SOLE PROPERTY OF ITT INDUSTRIES, INC., OR ITS SUBSIDIARY, AND IS PROVIDED SUBJECT TO RETURN. IT IS ISSUED IN STRICT CONFIDENCE AND SHALL NOT BE REPRODUCED, OR COPIED, OR DISCLOSED IN WHOLE OR IN PART, OR USED AS THE BASIS FOR THE MANUFACTURE OR SALES OF APPARATUS OR PARTS TO WHICH THE DOCUMENT RELATES, WITHOUT THE EXPRESS WRITTEN CONSENT OF ITT INDUSTRIES INC., OR ITS SUBSIDIARY. THIS LEGEND SHALL BE MARKED ON ANY REPRODUCTION HEREOF, IN WHOLE OR IN PART. ALL RIGHTS TO THE INFORMATION AND DESIGN DISCLOSED HEREIN ARE RESERVED TO ITT INDUSTRIES, INC., OR ITS SUBSIDIARY.

THIRD ANGLE PROJECTION

UNLESS OTHERWISE SPECIFIED, ALL DIMENSIONS ARE IN INCHES

UNLESS OTHERWISE NOTED

INCH	MM
X : ± 0.06	X : ± 1.5
X : ± 0.06	.X : ± 1.5
.XX : ± 0.06	.XX : ± .5
.XXX : ± 0.02	
X/X : ± 1/16	
.X° : ± .5°	.X° : ± .5°
X° : ± 1°	X° : ± 1°

	DATE	BY
DWN	06/19/08	MJM
CHKD	06/19/08	JRD
APVD	06/19/08	JRD

STANDARDS-ZSBBS U-BENDS
WEIR 00.75 - 02.00
VERTICAL RUN x VERTICAL VALVE
W/ BIOPURE & BIOTEK SAMPLE VALVE

WT: - ECN# 11862 MASTER DWG -

ITT Pure-Flo www.ittpureflo.com

SITE PA | D | 008883 SHEET 1 OF 1 | REV A

CD_PF_D 01/09/07